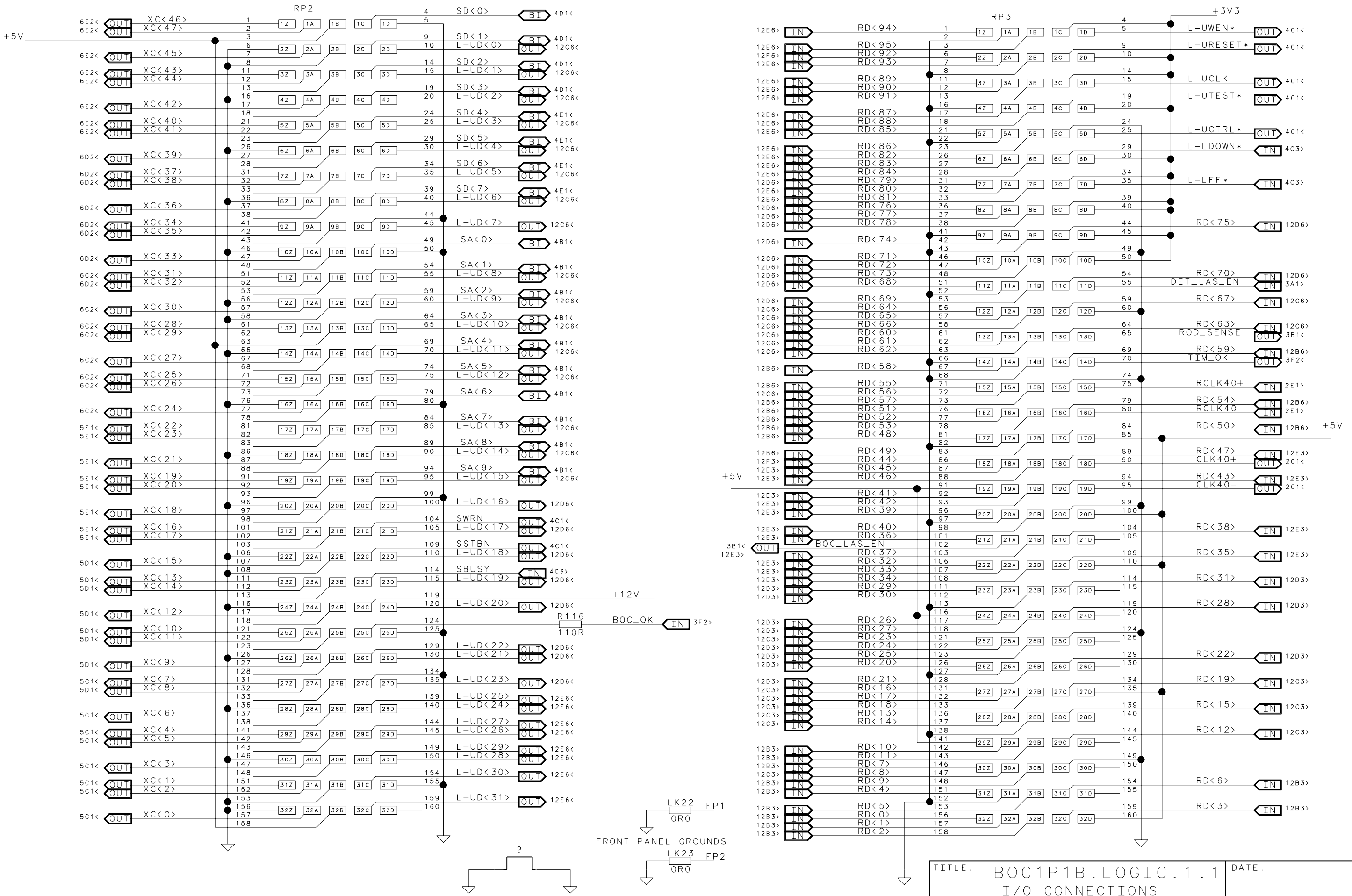
RP2
RP3
+5V
+3V3
+12V
R116
110R
BOC_OK
BOC_LAS_EN
SD<0>
SD<1>
L-UD<0>
SD<2>
L-UD<1>
SD<3>
L-UD<2>
SD<4>
L-UD<3>
SD<5>
L-UD<4>
SD<6>
L-UD<5>
SD<7>
L-UD<6>
L-UD<7>
SA<0>
SA<1>
L-UD<8>
SA<2>
L-UD<9>
SA<3>
L-UD<10>
SA<4>
L-UD<11>
SA<5>
L-UD<12>
SA<6>
SA<7>
L-UD<13>
SA<8>
L-UD<14>
SA<9>
L-UD<15>
L-UD<16>
SWRN
L-UD<17>
SSTBN
L-UD<18>
SBUSY
L-UD<19>
L-UD<20>
L-UD<22>
L-UD<21>
L-UD<23>
L-UD<25>
L-UD<24>
L-UD<27>
L-UD<26>
L-UD<29>
L-UD<28>
L-UD<30>
L-UD<31>
L-UWEN*
L-URESET*
L-UCLK
L-UTEST*
L-UCTRL*
L-LDOWN*
L-LFF*
RD<75>
RD<70>
DET_LAS_EN
RD<67>
RD<63>
ROD_SENSE
RD<59>
TIM_OK
RCLK40+
RD<54>
RCLK40-
RD<50>
RD<47>
CLK40+
RD<43>
CLK40-
RD<38>
RD<35>
RD<31>
RD<28>
RD<22>
RD<19>
RD<15>
RD<12>
RD<6>
RD<3>
LK22
0R0
FP1
FRONT PANEL GROUNDS
LK23
0R0
FP2
?
DRAWING LAST_MODIFIED=Mon Sep 15 12:04:00 2003
TITLE: BOC1P1B.LOGIC.1.1
I/O CONNECTIONS
DATE:
ENGINEER:
PAGE: 1 OF 13

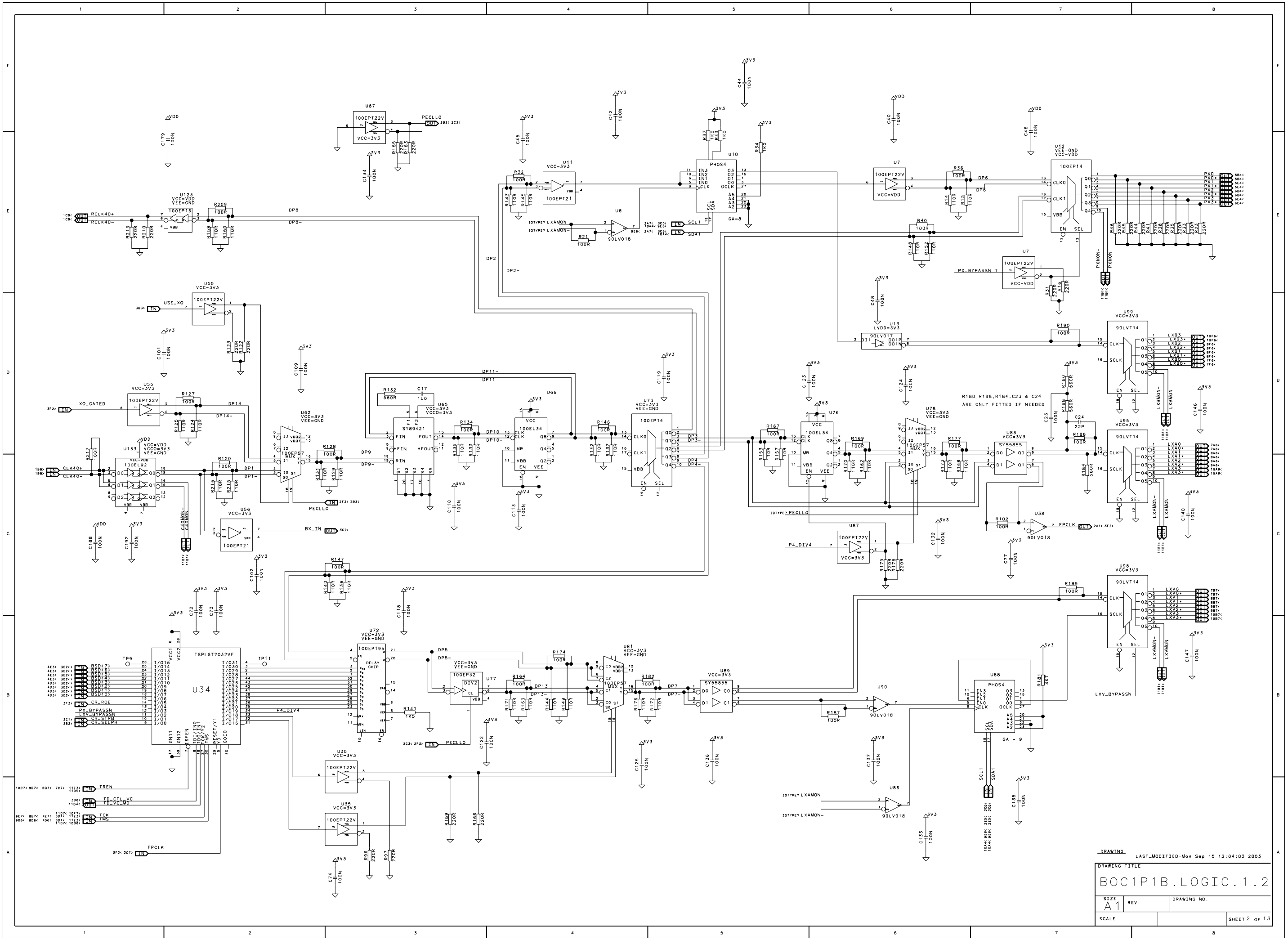
U87
100EPT22V
VCC=3V3
PECLLO
U123
VCC=VDD
VEE=GND
100EP16
RCLK40+
RCLK40-
U11
VCC=3V3
100EPT21
U10
PHOS4
U8
90LV018
IOTYPE? LXAMON
IOTYPE? LXAMON-
SCL1
SDA1
GA=8
U7
100EPT22V
VCC=VDD
U12
VEE=GND
VCC=VDD
100EP14
PX_BYPASSN
U13
LVDD=3V3
90LV017
U99
VCC=3V3
90LVT14
U55
VCC=3V3
100EPT22V
USE_XO
XO_GATED
U133
VCC=VDD
VCC=3V3
VEE=GND
100EL92
CLK40+
CLK40-
U62
VCC=3V3
VEE=GND
100EP57
U56
VCC=3V3
100EPT21
BX_IN
U65
VCC=3V3
VCC=3V3
SY89421
U66
100EL34
U73
VCC=3V3
VEE=GND
100EP14
U76
100EL34
U78
VCC=3V3
VEE=GND
100EP57
U83
VCC=3V3
SY55855
U95
VCC=3V3
90LVT14
R180,R188,R184,C23 & C24
ARE ONLY FITTED IF NEEDED
U87
100EPT22V
VCC=3V3
P4_DIV4
U38
90LV018
FPCLK
U98
VCC=3V3
90LVT14
LXV_BYPASSN
U34
ISPLSI2032VE
TP9
TP11
U72
VCC=3V3
VEE=GND
100EP195
DELAY CHIP
U81
VCC=3V3
VEE=GND
100EP57
U89
VCC=3V3
SY55855
U77
100EP32
DIV2
U90
90LV018
U88
PHOS4
GA = 9
U86
90LV018
IOTYPE? LXAMON
IOTYPE? LXAMON-
U36
VCC=3V3
100EPT22V
U35
VCC=3V3
100EPT22V
TREN
TD_CTL_VC
TD_VC_MD
TCK
TMS
FPCLK
DRAWING
LAST_MODIFIED=Mon Sep 15 12:04:03 2003
DRAWING TITLE
BOC1P1B.LOGIC.1.2
SIZE
A1
REV.
DRAWING NO.
SCALE
SHEET 2 OF 13

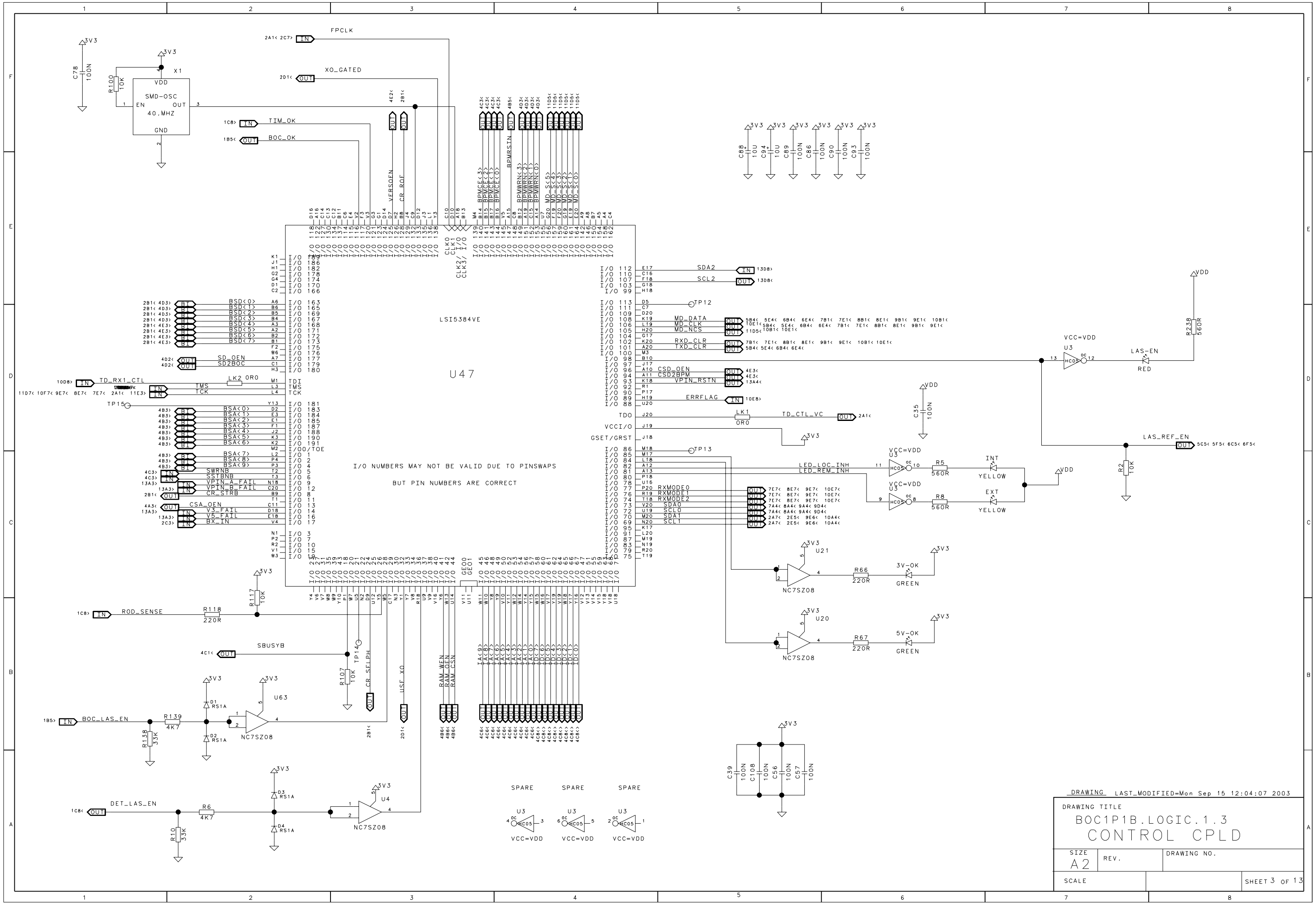
LSI5384VE
U47
I/O NUMBERS MAY NOT BE VALID DUE TO PINSWAPS
BUT PIN NUMBERS ARE CORRECT
SMD-OSC
40.MHZ
FPCLK
XO_GATED
TIM_OK
BOC_OK
ROD_SENSE
SBUSYB
BOC_LAS_EN
DET_LAS_EN
TD_RX1_CTL
SD_OEN
SD2BOC
SDA2
SCL2
MD_DATA
MD_CLK
MD_NCS
RXD_CLR
TXD_CLR
CSD_OEN
CSD2BPM
VPIN_RSTN
ERRFLAG
TD_CTL_VC
LED_LOC_INH
LED_REM_INH
LAS-EN
LAS_REF_EN
3V-OK
5V-OK
SPARE
SPARE
SPARE
DRAWING LAST_MODIFIED=Mon Sep 15 12:04:07 2003
DRAWING TITLE
BOC1P1B.LOGIC.1.3
CONTROL CPLD
SIZE
A2
REV.
DRAWING NO.
SCALE
SHEET 3 OF 13

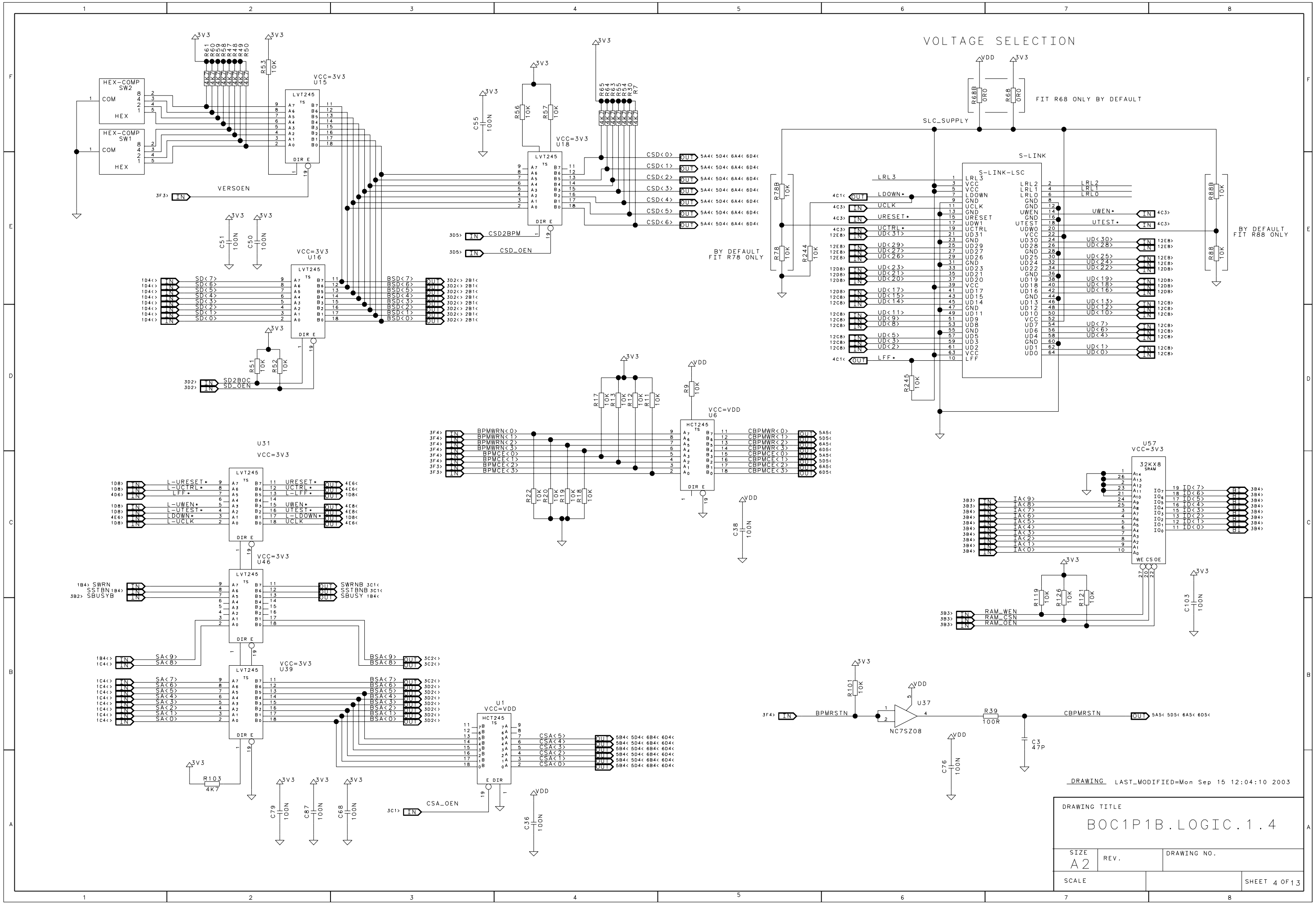
VOLTAGE SELECTION
FIT R68 ONLY BY DEFAULT
BY DEFAULT FIT R78 ONLY
BY DEFAULT FIT R88 ONLY
HEX-COMP SW2
HEX-COMP SW1
VERSOEN
VCC=3V3 U15
VCC=3V3 U18
VCC=3V3 U16
VCC=3V3 U31
VCC=3V3 U46
VCC=3V3 U39
VCC=VDD U6
VCC=VDD U1
S-LINK
S-LINK-LSC
U57
32KX8 SRAM
U37
NC7SZ08
DRAWING LAST_MODIFIED=Mon Sep 15 12:04:10 2003
DRAWING TITLE
BOC1P1B.LOGIC.1.4
SIZE A2
REV.
DRAWING NO.
SCALE
SHEET 4 OF 13

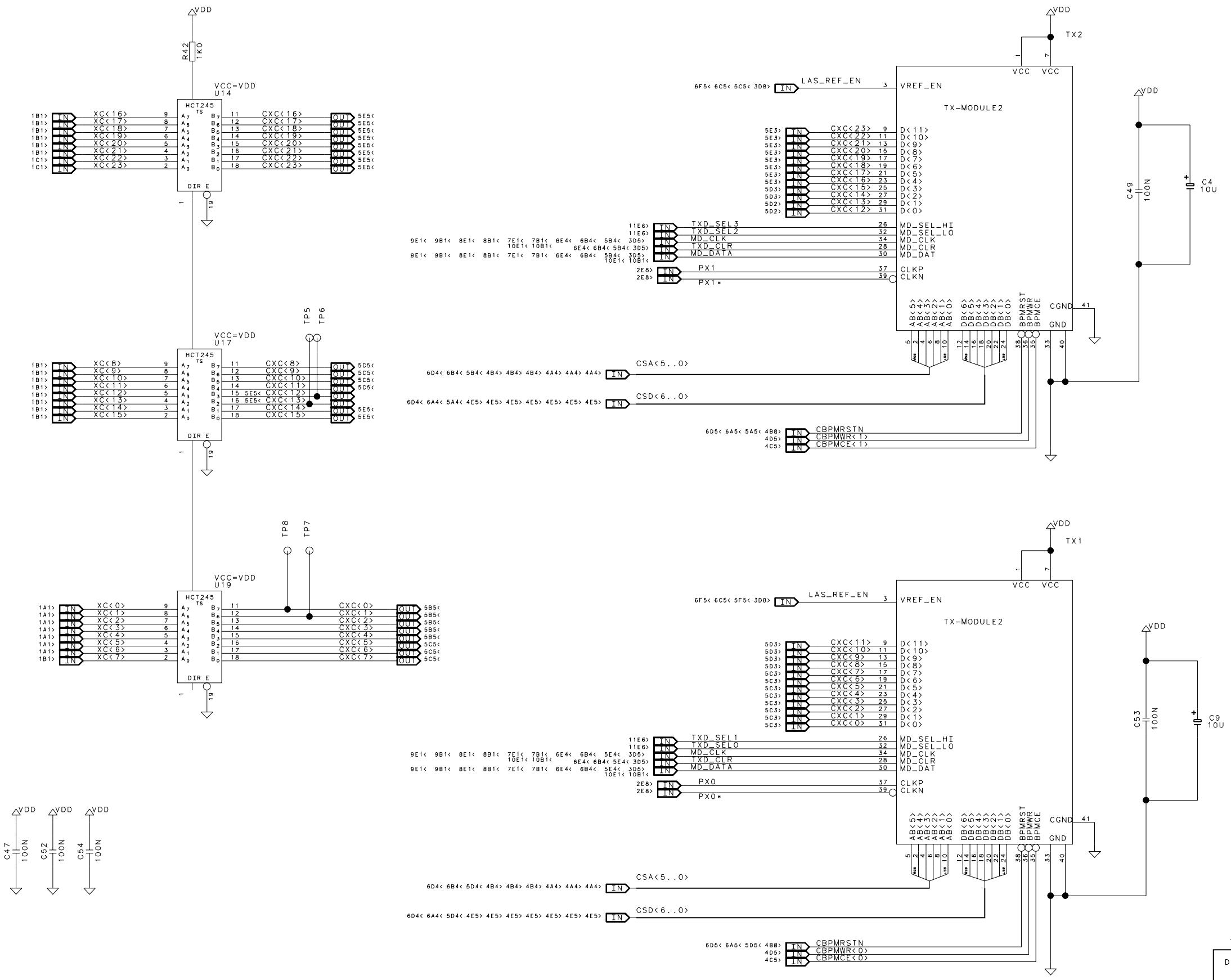

DRAWING LAST_MODIFIED=Mon Sep 15 12:04:12 2003

DRAWING TITLE		
BOC1P1B.LOGIC.1.5		
SIZE A2	REV.	DRAWING NO.
SCALE		SHEET 5 OF 13

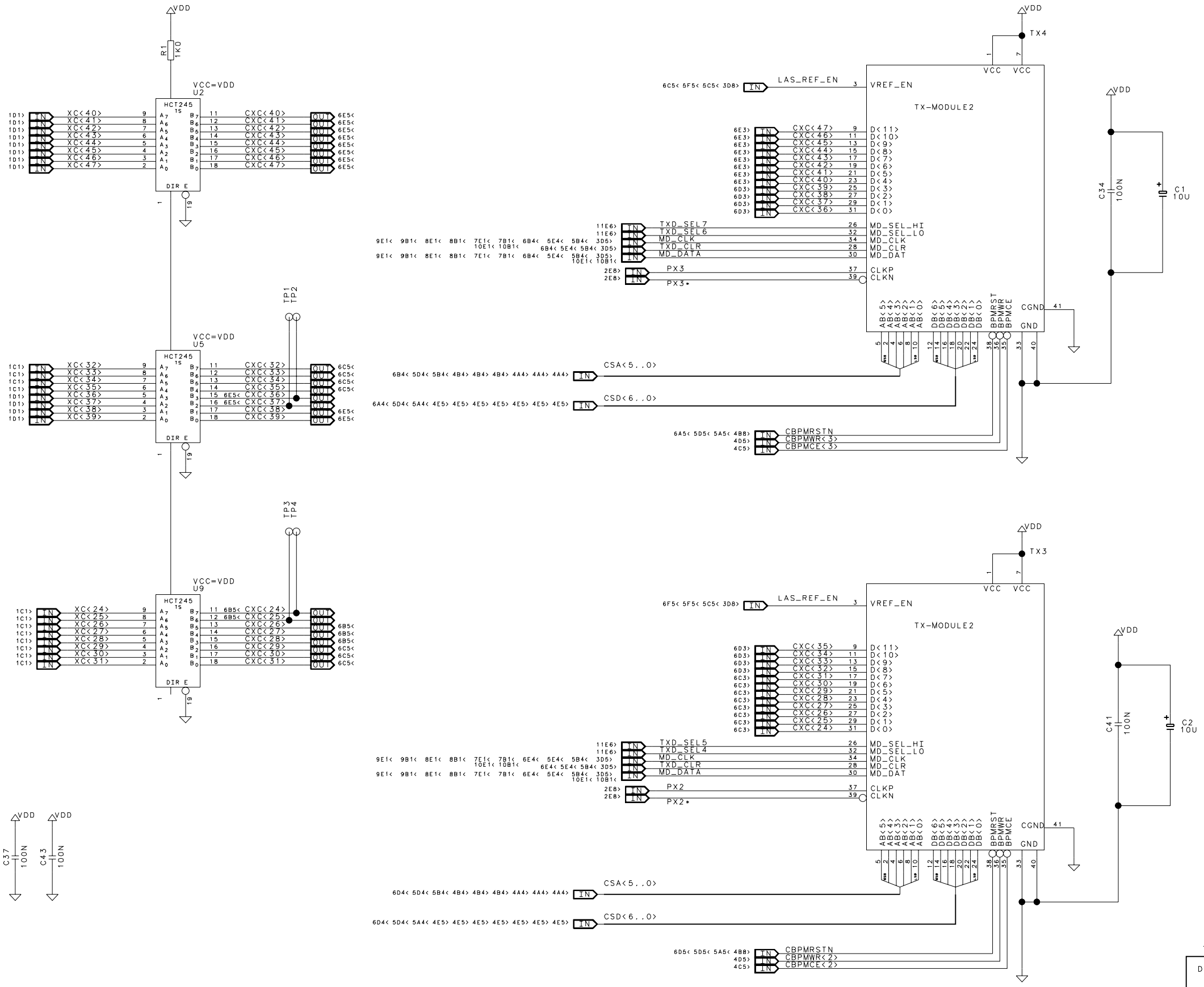

DRAWING LAST_MODIFIED=Mon Sep 15 12:04:13 2003

DRAWING TITLE

BOC1P1B.LOGIC.1.6

SIZE	REV.	DRAWING NO.
A2		
SCALE		SHEET 6 OF 13

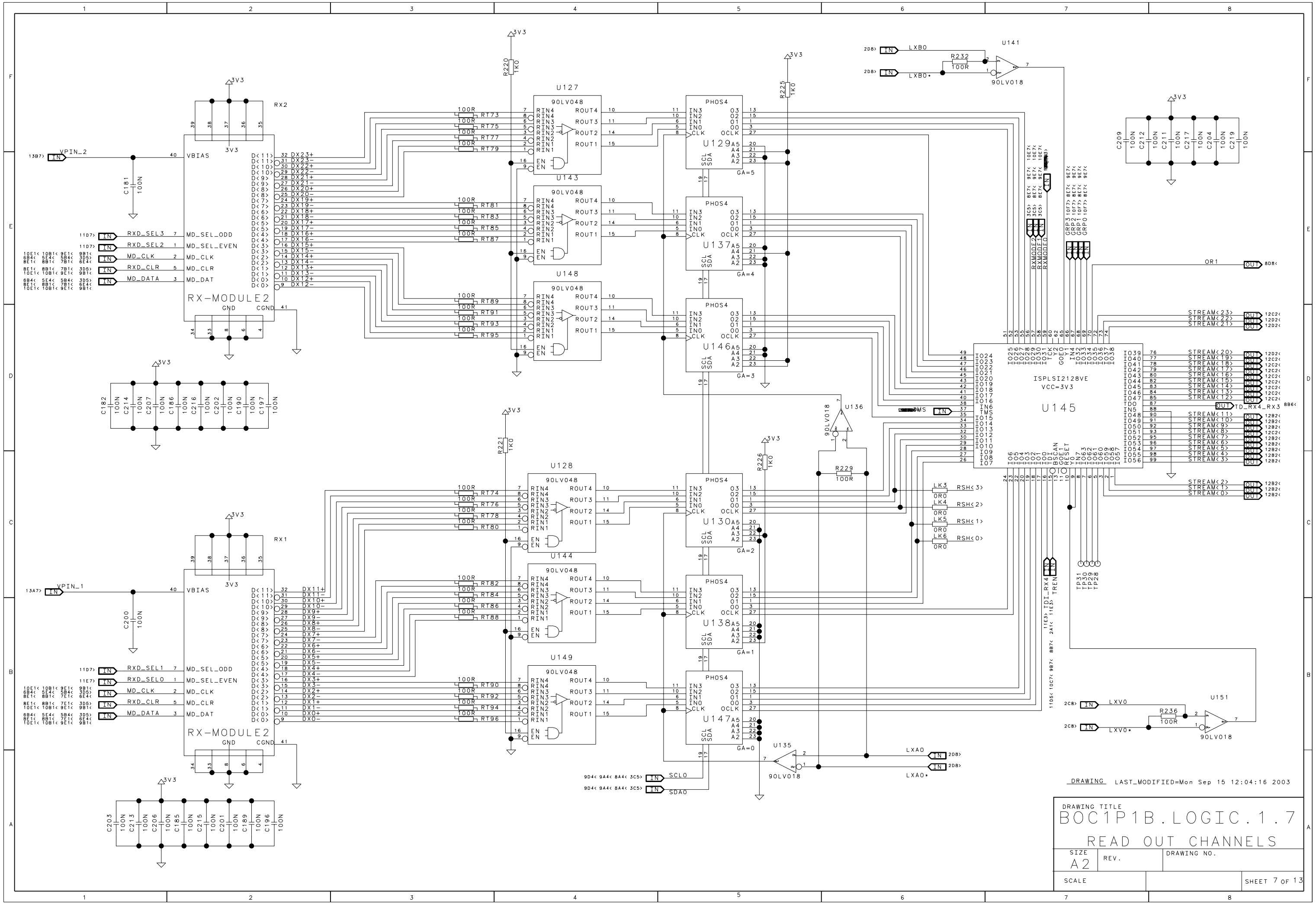
RX-MODULE2
RX2
RX1
VPIN_2
VPIN_1
VBIAS
MD_SEL_ODD
MD_SEL_EVEN
MD_CLK
MD_CLR
MD_DAT
RXD_SEL3
RXD_SEL2
RXD_SEL1
RXD_SEL0
RXD_CLR
MD_DATA
GND
CGND
3V3
90LV048
PHOS4
GA=5
GA=4
GA=3
GA=2
GA=1
GA=0
U127
U143
U148
U128
U144
U149
U129
U137
U146
U130
U138
U147
U141
U136
U135
U151
90LV018
ISPLSI2128VE
VCC=3V3
U145
LXB0
LXB0*
LXV0
LXV0*
LXA0
LXA0*
SCL0
SDA0
TDI_RX4
TREN
TD_RX4_RX3
OR1
DRAWING LAST_MODIFIED=Mon Sep 15 12:04:16 2003
DRAWING TITLE
BOC1P1B.LOGIC.1.7
READ OUT CHANNELS
SIZE
A2
REV.
DRAWING NO.
SCALE
SHEET 7 OF 13

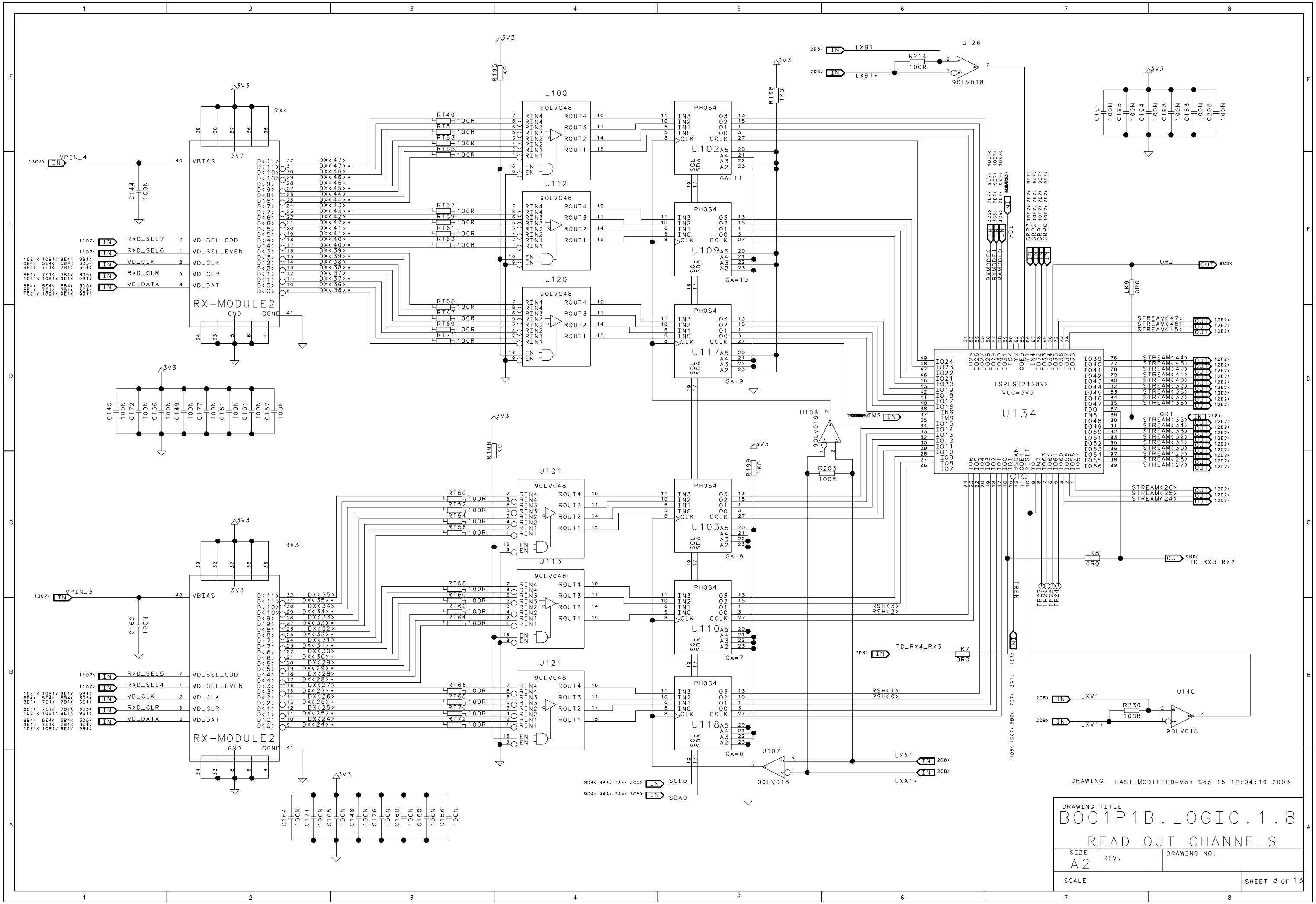
RX-MODULE2
RX4
RX3
VPIN_4
VPIN_3
VBIAS
GND
CGND
RXD_SEL7
RXD_SEL6
MD_CLK
RXD_CLR
MD_DATA
MD_SEL_ODD
MD_SEL_EVEN
MD_CLR
MD_DAT
RXD_SEL5
RXD_SEL4
U100
U112
U120
U101
U113
U121
90LV048
U102
U109
U117
U103
U110
U118
PHOS4
GA=11
GA=10
GA=9
GA=8
GA=7
GA=6
U126
90LV018
U108
U107
U140
R214
R203
R230
R195
R196
R198
R199
LXB1
LXB1*
LXA1
LXA1*
LXV1
LXV1*
TD_RX4_RX3
TD_RX3_RX2
LK7
LK8
LK9
OR1
OR2
ISPLSI2128VE
VCC=3V3
U134
TMS
TCK
TREN
SCLO
SDAO
RSH<3>
RSH<2>
RSH<1>
RSH<0>
STREAM<47>
STREAM<46>
STREAM<45>
STREAM<44>
STREAM<43>
STREAM<42>
STREAM<41>
STREAM<40>
STREAM<39>
STREAM<38>
STREAM<37>
STREAM<36>
STREAM<35>
STREAM<34>
STREAM<33>
STREAM<32>
STREAM<31>
STREAM<30>
STREAM<29>
STREAM<28>
STREAM<27>
STREAM<26>
STREAM<25>
STREAM<24>
DRAWING LAST_MODIFIED=Mon Sep 15 12:04:19 2003
DRAWING TITLE
BOC1P1B.LOGIC.1.8
READ OUT CHANNELS
SIZE
A2
REV.
DRAWING NO.
SCALE
SHEET 8 OF 13

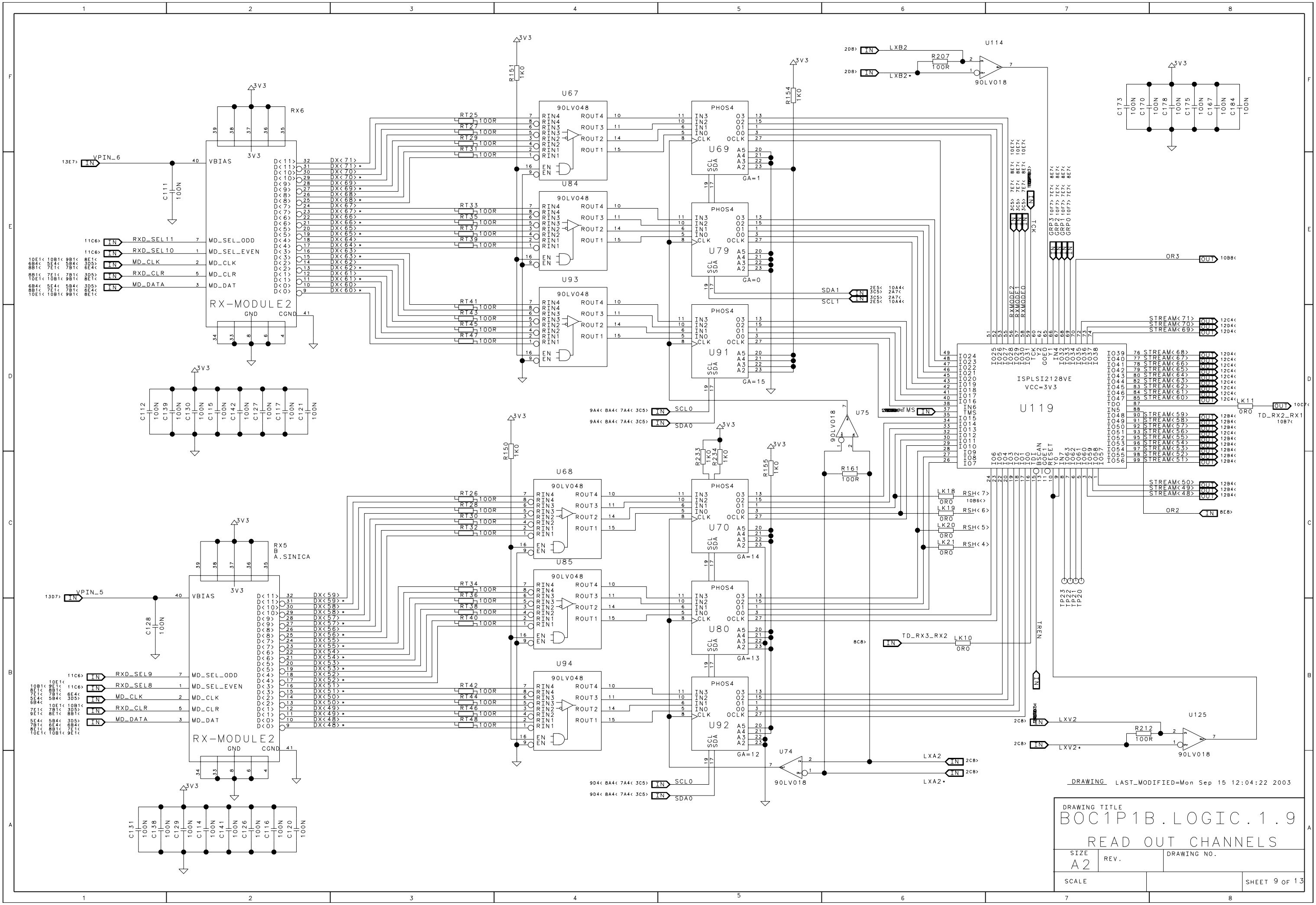
RX-MODULE2
RX6
RX5
A.SINICA
VBIAS
MD_SEL_ODD
MD_SEL_EVEN
MD_CLK
MD_CLR
MD_DAT
RXD_SEL11
RXD_SEL10
RXD_SEL9
RXD_SEL8
VPIN_6
VPIN_5
90LV048
U67
U84
U93
U68
U85
U94
PHOS4
U69
U79
U91
U70
U80
U92
GA=1
GA=0
GA=15
GA=14
GA=13
GA=12
ISPLSI2128VE
VCC=3V3
U119
90LV018
U114
U75
U74
U125
SCL0
SDA0
SDA1
SCL1
LXB2
LXB2*
LXV2
LXV2*
LXA2
LXA2*
TD_RX2_RX1
TD_RX3_RX2
OR3
OR2
TCK
TMS
TREN
RXMODE2
RXMODE1
RXMODE0
DRAWING LAST_MODIFIED=Mon Sep 15 12:04:22 2003
DRAWING TITLE
BOC1P1B.LOGIC.1.9
READ OUT CHANNELS
SIZE
A2
REV.
DRAWING NO.
SCALE
SHEET 9 OF 13

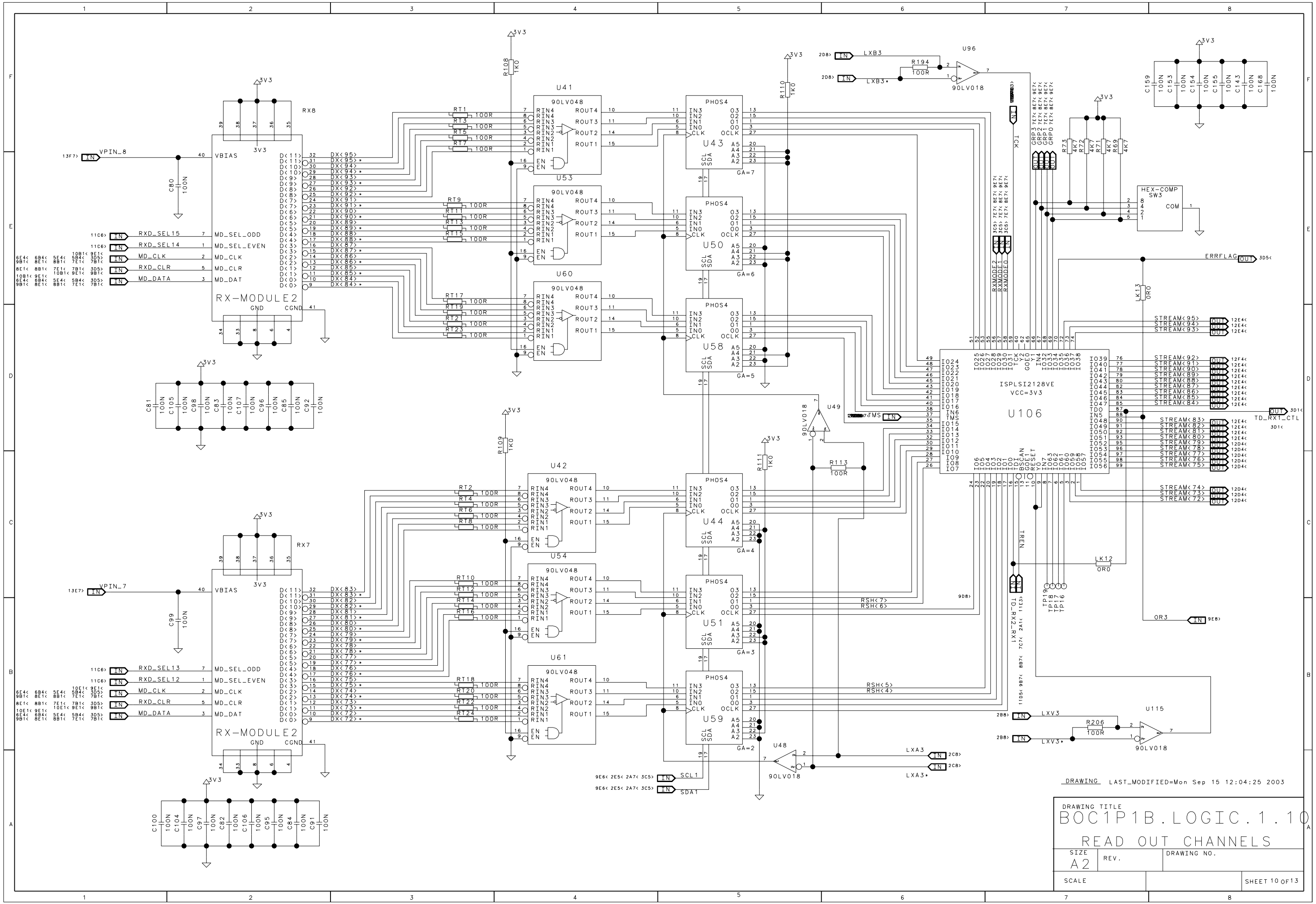
RX-MODULE2
RX8
RX7
VPIN_8
VPIN_7
VBIAS
MD_SEL_ODD
MD_SEL_EVEN
MD_CLK
MD_CLR
MD_DAT
RXD_SEL15
RXD_SEL14
RXD_SEL13
RXD_SEL12
90LV048
U41
U53
U60
U42
U54
U61
PHOS4
U43
U50
U58
U44
U51
U59
ISPLSI2128VE
VCC=3V3
U106
90LV018
U96
U49
U48
U115
HEX-COMP
SW3
LXB3
LXB3*
LXV3
LXV3*
LXA3
LXA3*
TMS
TCK
TREN
ERRFLAG
TD_RX1_CTL
TD_RX2_RX1
SCL1
SDA1
RSH<7>
RSH<6>
RSH<5>
RSH<4>
DRAWING LAST_MODIFIED=Mon Sep 15 12:04:25 2003
DRAWING TITLE
BOC1P1B.LOGIC.1.10
READ OUT CHANNELS
SIZE
A2
REV.
DRAWING NO.
SCALE
SHEET 10 OF 13

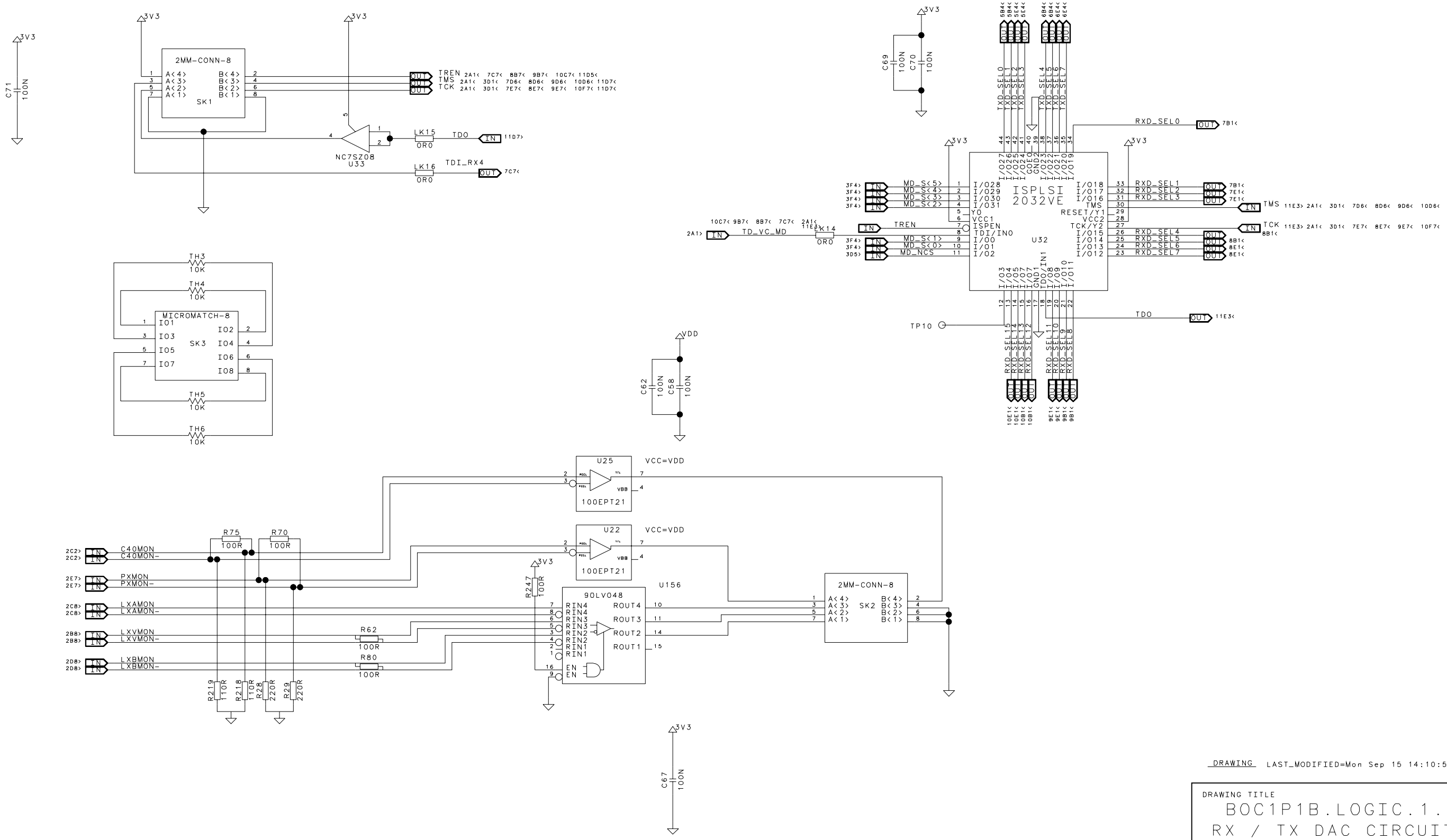

DRAWING LAST_MODIFIED=Mon Sep 15 14:10:51 2003

DRAWING TITLE
BOC1P1B.LOGIC.1.11
RX / TX DAC CIRCUITRY

SIZE	REV.	DRAWING NO.
A2		
SCALE		SHEET 11 OF 13

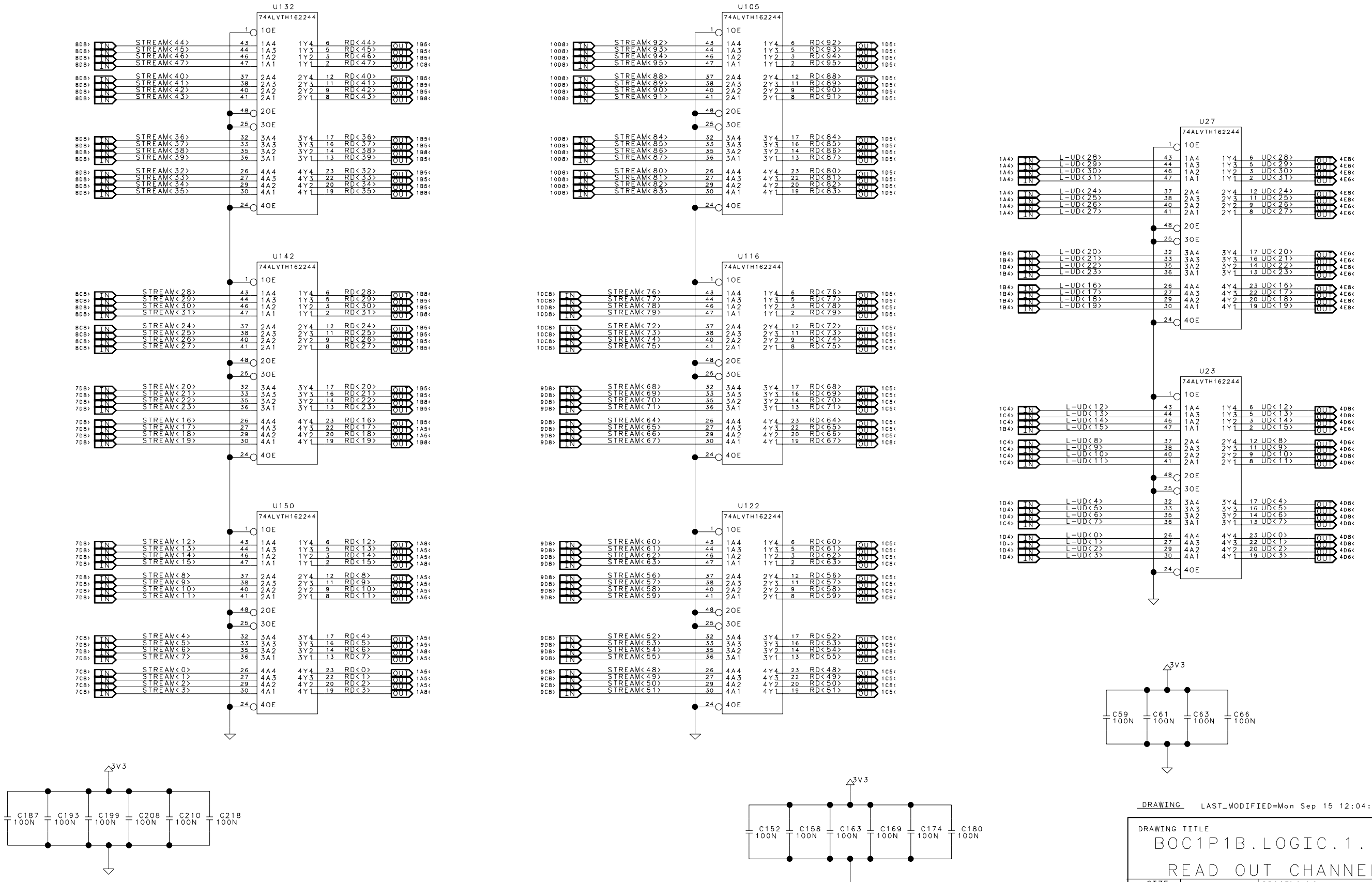

DRAWING LAST_MODIFIED=Mon Sep 15 12:04:28 2003

DRAWING TITLE
BOC1P1B.LOGIC.1.12
READ OUT CHANNELS

SIZE	REV.	DRAWING NO.
A2		
SCALE		SHEET 12 OF 13

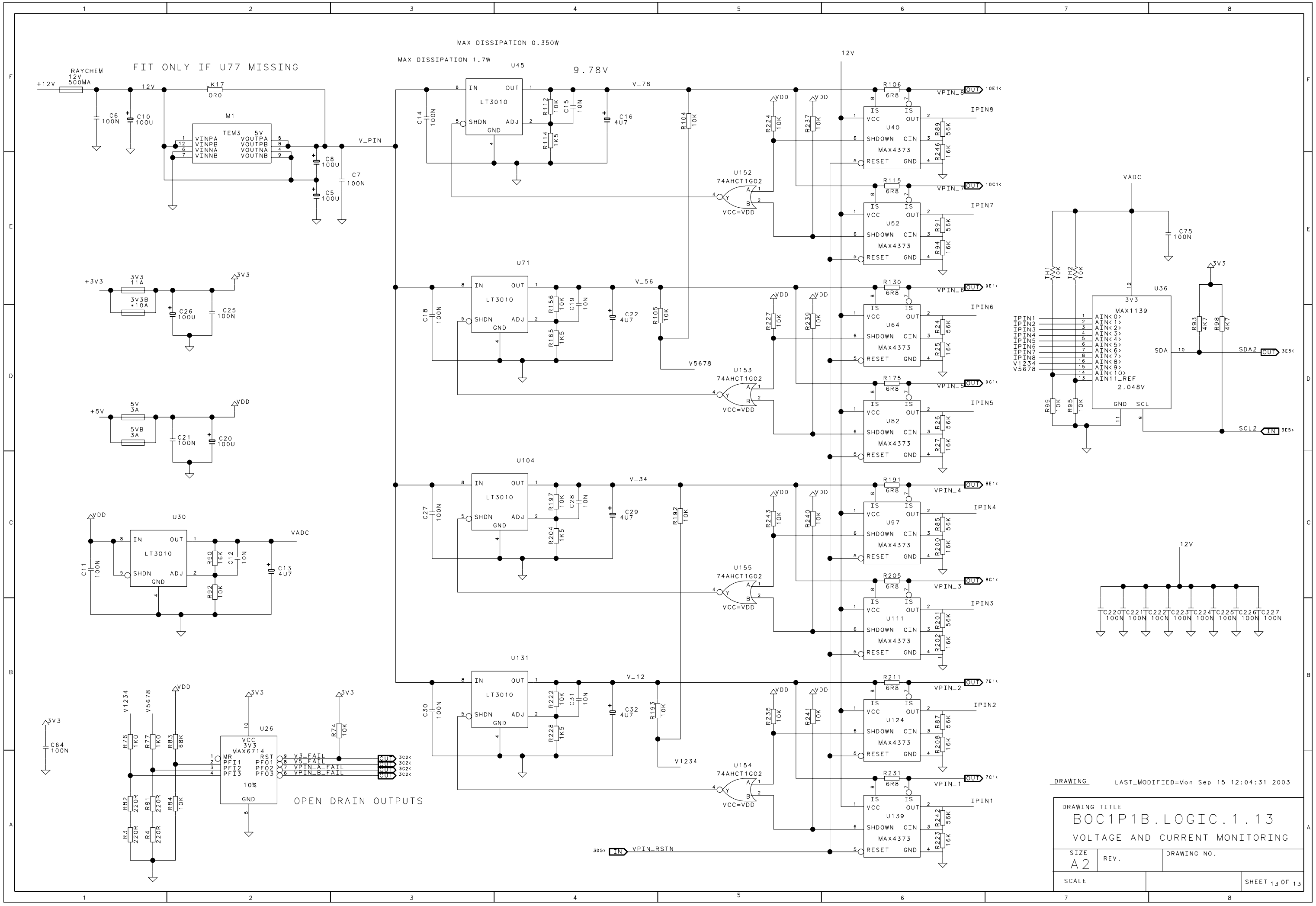
FIT ONLY IF U77 MISSING
MAX DISSIPATION 0.350W
MAX DISSIPATION 1.7W
9.78V
RAYCHEM 12V 500MA
+12V
12V
LK17 0R0
M1 TEM3 5V
VINPA VINPB VINNA VINNB
VOUTPA VOUTPB VOUTNA VOUTNB
V_PIN
U45 LT3010
IN OUT SHDN ADJ GND
V_78
U71 LT3010
V_56
U104 LT3010
V_34
U131 LT3010
V_12
U152 74AHCT1G02
U153 74AHCT1G02
U155 74AHCT1G02
U154 74AHCT1G02
VCC=VDD
V5678
V1234
U40 U52 U64 U82 U97 U111 U124 U139
MAX4373
IS VCC SHDOWN RESET OUT CIN GND
VPIN_8 VPIN_7 VPIN_6 VPIN_5 VPIN_4 VPIN_3 VPIN_2 VPIN_1
IPIN8 IPIN7 IPIN6 IPIN5 IPIN4 IPIN3 IPIN2 IPIN1
VADC
U36 MAX1139 3V3
AIN<0> AIN<1> AIN<2> AIN<3> AIN<4> AIN<5> AIN<6> AIN<7> AIN<8> AIN<9> AIN<10> AIN11_REF
2.048V
SDA SCL
SDA2 SCL2
C75 100N
TH1 10K TH2 10K
R99 10K R95 10K
R93 4K7 R98 4K7
+3V3 3V3 11A 3V3B *10A
C26 100U C25 100N
+5V 5V 3A 5VB 3A
C21 100N C20 100U
VDD
U30 LT3010
VADC
C11 100N C12 10N C13 4U7
R90 16K R92 10K
C64 100N
U26 MAX6714 3V3
VCC 3V3 MR PFI1 PFI2 PFI3 RST PFO1 PFO2 PFO3 GND 10%
V3_FAIL V5_FAIL VPIN_A_FAIL VPIN_B_FAIL
R76 1K0 R77 1K0 R83 68K R82 220R R81 220R R84 10K R3 220R R4 220R
R74 10K
OPEN DRAIN OUTPUTS
VPIN_RSTN
12V
C220 100N C221 100N C222 100N C223 100N C224 100N C225 100N C226 100N C227 100N
DRAWING
LAST_MODIFIED=Mon Sep 15 12:04:31 2003
DRAWING TITLE
BOC1P1B.LOGIC.1.13
VOLTAGE AND CURRENT MONITORING
SIZE A2
REV.
DRAWING NO.
SCALE
SHEET 13 OF 13